DHI-VTO3511US-PC2

IP Villa Door Station



- Dual cameras that offer wider coverage, with the top camera supporting up to 5 MP and the bottom camera supporting up to 2 MP.
- Unique design that produces an ultra-wide angle view.
- Supports 2 local locks.
- Intelligent video features that detect motion, objects, loitering, and other events.
- Offers smart audio features such as AI noise reduction and crying detection.
- Features AI backlighting and privacy masking.
- Tracks people on camera during two-way talk.
- Supports full-color night vision.
- IP65 or IK07 rated.
- Supports PoE power supply.
- Supports surface mount installation.

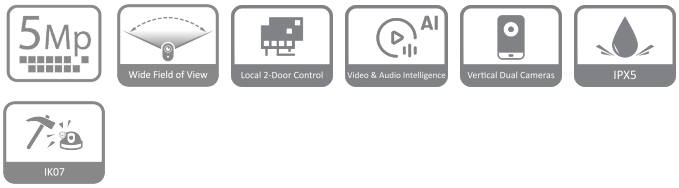

Scene

Villa

Technical Specification

System

Main Processor	Embedded Processor
Operating System	Embedded Linux
Button Type	Mechanical
Number of Buttons	1
Interoperability	ONVIF;CGI
Network Protocol	IPv4;RTSP;UDP;DNS;P2P;UPnP;RTP;TCP;SIP

Basic

Camera	Camera at the upper position: 1/2.7" 5 MP CMOS HD wide dynamic color camera; Camera at the lower position: 1/2.9" 2 MP CMOS HD color camera
Field of View	Camera at the upper position: horizontal 150°, vertical 100°, diagonal 169° Camera at the lower position: horizontal 104°, vertical 60°, diagonal 120°
WDR	Camera at the upper position: 120 dB; Camera at the lower position: DWDR
Noise Reduction	3D NR
Video Compression	H.264; H.265
Video Resolution	Camera at the upper position: Main stream: 3072 × 1728,2688 × 1520,1080p,720p,WVGA; Sub stream: 1080p,720p, D1,WVGA,CIF; Camera at the lower position: Main stream: 1080p,720p,D1,WVGA,CIF; Sub stream: 720p,D1,WVGA,CIF,QVGA
Video Frame Rate	PAL: 25 fps; NTSC: 30 fps
Video Bit Rate	256 kbps-14 Mbps
Light Compensation	Auto white light;Auto IR
Day/Night	Camera at the upper position: Auto (ICR), Color/B/W; Camera at the lower position: NA
Audio Compression	G.711a; G.711u; PCM
Audio Input	1 channel
Audio Output	Built-in speaker
Audio Mode	Two-way audio
Audio Enhancement	Echo suppression/digital noise reduction/AI noise reduction
Audio Sampling	PCM:16 kHz，16 bit; G711U:8 kHz，8 bit; G711A:8 kHz，8 bit;

Function

Communication Mode	Full digital
Verification Method	Card;Remote
Motion Detection	General motion detection; Intelligent motion detection
Auto Snapshot	Yes (SD card inserted in VTO is needed)
Leave Videos	Yes (SD card is inserted in the indoor monitor or door station)
Storage	Supports Micro SD card (up to 512 GB)

Web Configuration	Yes
Auto Registration	Yes

RFID

Card Type	IC card
Modulation Type	ASK
Frequency Range	13.56 MHz
Max. Transmission Power	42 dBuA/m@10 m

Performance

Card Reading Distance	Large card: 2 cm; Small card: 1.8 cm
Issue Card Locally	Yes
Casing Material	Aluminum alloy

Capacity

Card Capacity	10,000
User Capacity	3,000

Port

RS-485	1
Alarm Input	4 channels (used with the unlock port and door sensor port. Unlock and door sensor ports are selected by default)
Alarm Output	2 channels (used with the door lock control port. Door lock control port is selected by default)
Power Output	1 port (12 V, 1 A)
Exit Button	2 channels
Door Status Detection	2 channels
Lock Control	2 channels
Network Port	1 channel

Alarm

Tamper Alarm	Yes

General

Appearance Color	Silver
Power Supply	Standard PoE; With power output: 12 VDC, 2 A; Without power output: 12 VDC, 1 A
Power Adapter	Optional
Installation	Surface Mount
Certifications	CE
Accessory	Power cable: Optional (not required for PoE power supply); RS-485 and power output cable: Standard; Alarm cable: Standard; Bracket: Standard; Rain shield: Optional
Product Dimensions	170.9 mm × 85.9 mm × 39.5 mm (6.73" × 3.38" × 1.56")
Protection	IP65 (requires sealant); IK07
Operating Temperature	–30 °C to +60 °C (–22 °F to +140 °F)
Operating Humidity	10%–90% (RH), non-condensing
Operating Environment	Outdoor
Operating Altitude	0 m–3,000 m (0 ft–9,842.52 ft)
Power Consumption	Powered by 12 V adapter: ≤3.4 W (standby), ≤10.6 W (working); Powered by PoE: ≤5.2 W (standby), ≤17.3 W (working)
Gross Weight	0.85 kg (1.87 lb)
Storage Temperature	0 °C to +40 °C (+32 °F to +104 °F)
Storage Humidity	30%–75% (RH), non-condensing

Ordering Information

Type	Model	Description
IP Villa Door Station	DHI-VTO3511US-PC2	IP Villa Door Station

Installation

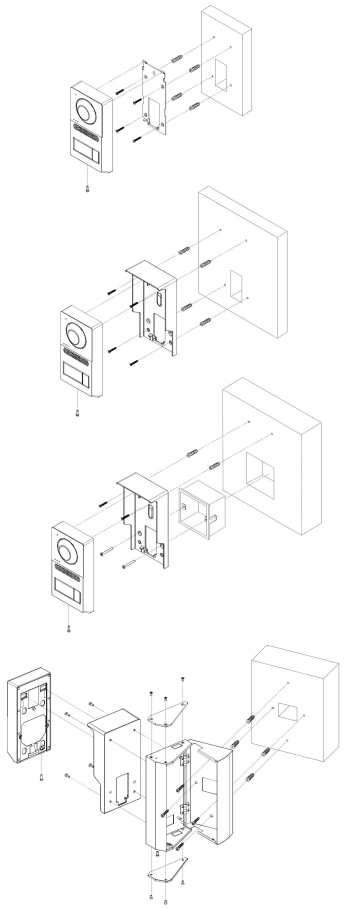

Dimensions (mm[inch])

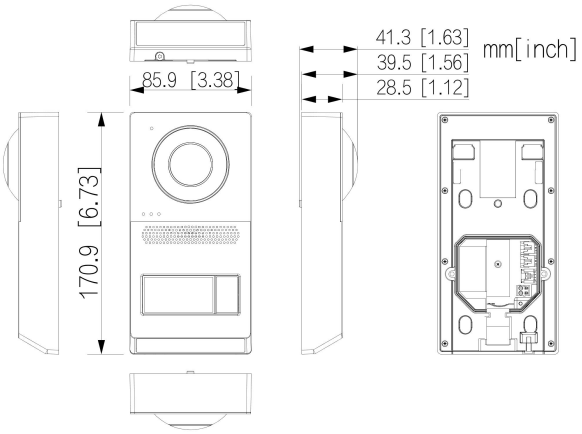

Application

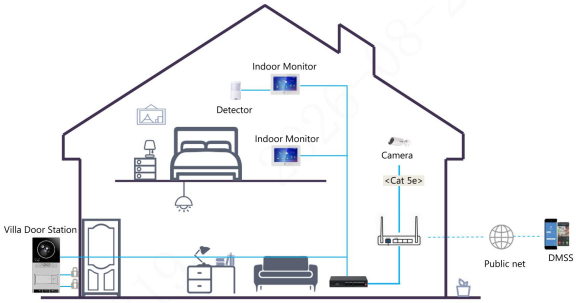

Rev 002.000 ©2026 Dahua. All rights reserved. Design and specifications are subject to change without notice.
Pictures in the document are for reference only, and the actual product shall prevail.